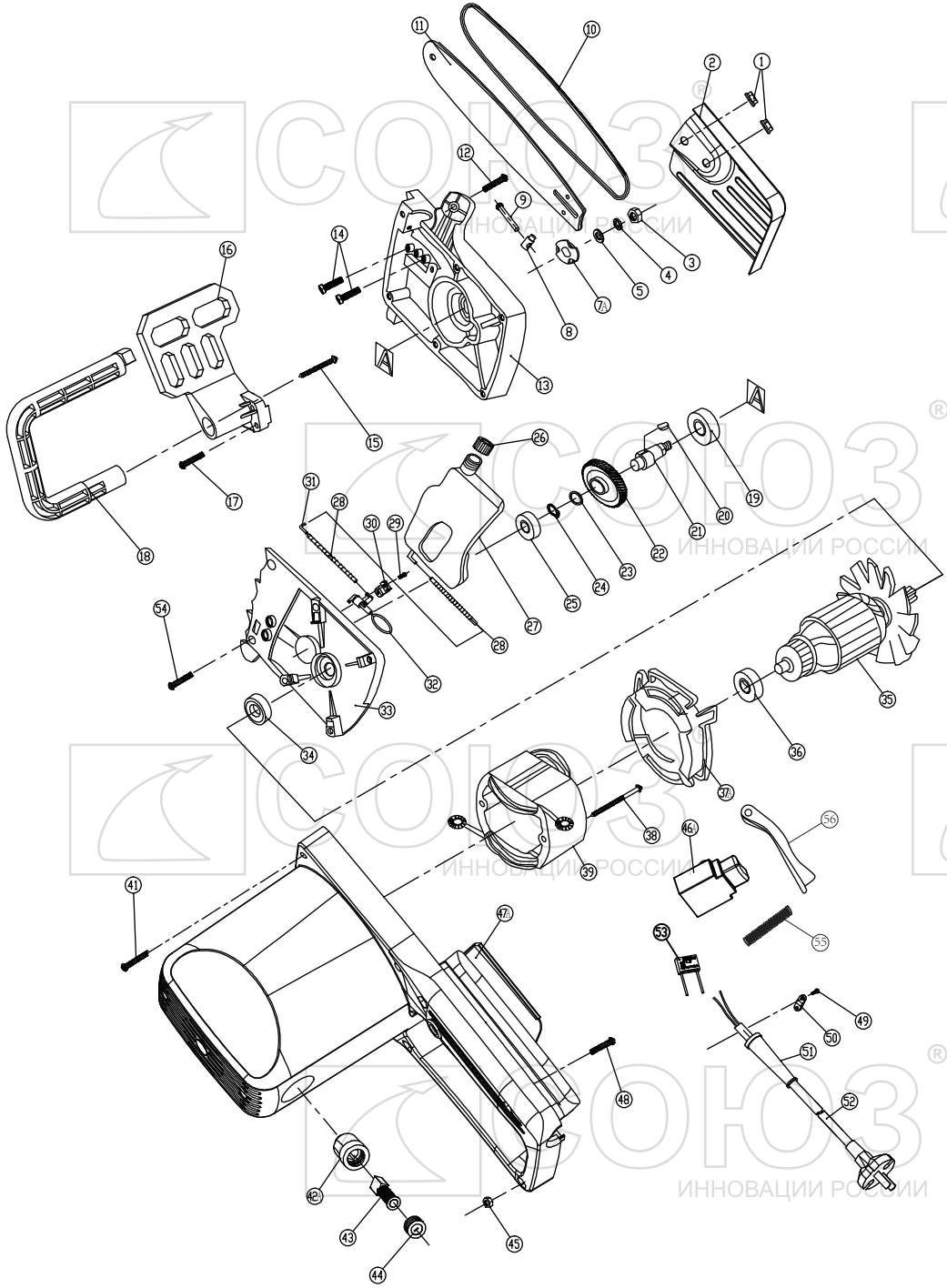

ПЦС-9922 ПЦС-9926

NO.	DESCRIPTION	NO.	DESCRIPTION
1	NUT	29	SCREW
2	SIDE COVER	30	OIL PUMP CLAMP PLATE
3	NUT	31	OUTLET TUBE
4	SPRING WASHER	32	OIL PUMP
5	WASHER	33	MIDDLE COVER
7A	CHAIN WHEEL	34	BEARING6201
8	ADJUST PIN	35	ROTOR
9	SCREW	36	BEARING6200
10	SAW CHAIN	37A	FAN GUARD
11	GUIDE BAR	38	SCREW
12	SCREW	39	STATOR
13	GEAR BOX	41	SCREW
14	BOLT	42A	BRUSH HOLDER
15	SCREW	43	CARBON BRUSH
16	GUARD PLATE	44	BRUSH COVER
17	SCREW	45	NUT
18	HANDLE	46A	SWITCH
19	BEARING6202	47A	HOUSING ASSEMBLY
20	WOODRUFFE KEY	48	SCREW
21	OUTPUT SHAFT	49	SCREW
22	GEAR	50	CORD CLAMP
23	WASHER	51	CORD SLEEVE
24	CIRCLIP	52	POWER CORD
25	BEARING6001	53	CAPACITOR
26	TANK CAP	54	SCREW
27	OIL TANK	55	SPRING
28	OIL TUBE	56	TRIGGER

RU-SO20170908
Ver:1.2

СОЮЗ® ИННОВАЦИИ РОССИИ